Self Bunded Diesel Tanks Bulk Storage

Polymaster

New, smarter and versatile way to store Bulk Diesel

- Cutting edge developments at Polymaster put our self-bunded tank at the forefront of diesel storage.
- These tanks pay for themselves quickly, putting money back into your pocket.
- A **PLUG-AND-PLAY** set-up with everything you need already factory fitted standard gets your fleet on the move immediately. All you need to do is connect power and fill 'er up.

Three models available to suit every need from 2,300ltrs up to 10,000ltrs:

1. Essential
2. Ranger
3. Quantum – with fuel management system

- SKIDS also available giving you even greater versatility on-site.
- Double-walled self-bunded tanks are also available to be direct connected to engines/generators/ pumps.

Double strength UV+

Won't rust or rot, so it's suitable for coastal locations

Highest quality

Cost reduction on installation costs

Safe and secure

Personalised pump activation + lockable cabinet

Customise your tank

12V, 240V and solar options available

Portable

Just empty and relocate – it's that easy

110%

Bund capacity to comply with AS3780

Built to

AS/NZS4766 specifications

Plug & Play

Easy installation saving you time and hassle

> *"Polymaster worked closely with Worksafe to ensure the highest possible standard was complied to."*
>
> **David S, Research & Development**

Visit our website for more
→ polymaster.com.au

Diesel Self Bunded Tank

THREE MODELS AVAILABLE: ESSENTIAL, RANGER OR QUANTUM

Built-in breather to vent fumes

Mechanical overfill protection

One-piece polyethylene tank

Flame Retardant Outer Tank

110% Secondary Containment Bund Capacity

Optional solar panel (12V model only)

Inspection lid

Suction pipe (Strainer at foot of suction hose)

Anti-splash/anti-static top fill assembly

Secured lockable cabinet to protect equipment

Earthing rod (supplied)

Cabinet Details

(Essential Model Shown)

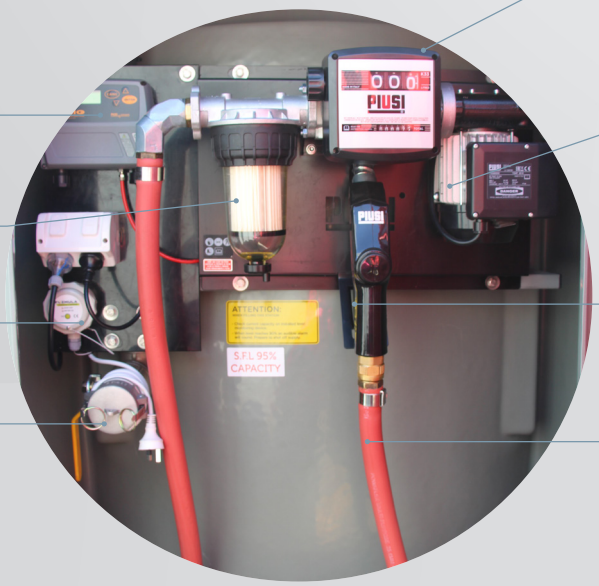

Digital tank level indicator

30 micron water filter

Bund alarm

2" camlock connection to fill - top fill assembly

Mechanical fluid meter (digital available with Ranger and Quantum models)

Piusi pump 240V / 70lpm (12V available with Ranger model)

Automatic shut-off nozzle

6m diesel grade hose

(Image for illustrative purposes only)

Compare the Difference

FEATURES	ESSENTIAL	RANGER	QUANTUM
Power supply - 240V	✔	✔	✔
Power supply - 12V	✘	✔	✘
70LPM Piusi pump	✔	✔	✔
6mtr dispensing hose with auto-shut off trigger nozzle	✔	✔	✘
10mtr hose reel with auto-shutoff trigger nozzle	✘	✘	✔
Auto-shutoff nozzle holster	✘	✔	✔
30 micron clear water capture filter - to 150LPM	✔	✔	✔
2" camlock connection to fill - top fill assembly	✔	✔	✔
Anti-splash/anti-static top fill assembly	✔	✔	✔
Mechanical overfill protection	✔	✔	✔
High/Low level electronic audible alarm	✘	✔	✔
Bund alarm	✔	✔	✔
110% secondary containment bund capacity	✔	✔	✔
Flame retardant outer tank material	✔	✔	✔
Digital level indicator	✔	✔	✔
Secured lockable cabinet to protect equipment	✔	✔	✔
Mechanical fluid meter to measure vehicle usage	✔	✘	✘
Digital fluid meter to measure vehicle usage	✘	✔	✔
Power control box with auto time out (10mins) & emergency stop	✘	✔	✔
Fuel management system for up to 120 users	✘	✘	✔

Specifications

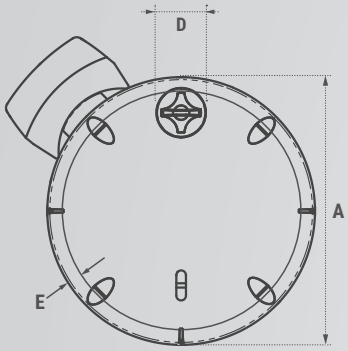

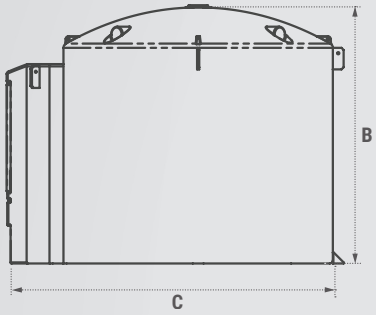

CODE	CAPACITY (LTRS)	A (MM)	B (MM)	C (MM)	D (MM)	E (MM)	F (MM)
DMDS2300	2,300	1600	2160	2200	2120	490	150
DMDS3300	3,300	1800	2130	2200	2300	490	130
DMDS5000	5,000	2200	2080	2260	2750	490	120
DMDS7000	7,000	2500	2190	2350	3070	500	170
DMDS10000	10,000	2500	2520	2710	3062	500	40

Extract – AS1940-2017 Storage and handline of flammable and combustible liquids

2.2.5.2 Polyethylene or composite storage tanks for minor storage

This clause specifies requirements for the storage of combustible liquids within above-ground polyethylene storage tanks that are rotationally moulded in one piece seamless construction in accordance with AS/NZS 4766, or composite tanks, as follows:

a. The maximum capacity of such tanks shall not exceed 10,000ltrs
b. Such tanks shall have provision to dissipate static electricity and prevent splash filling
c. Such tanks shall have sufficient means for venting to prevent damage to the tank as a result of normal operational use of the tank
d. Such tanks are to be located within a bund compliant with Clause 5.8

Other quality diesel storage solutions

CUBE UTE PACKS

- 400ltr
- Bund available
- Diesel & AdBlue® combo available

UTE PACKS

- 200, 400, 600, 800 ltr

TRANSFER UNITS

- 600, 1200, 2000, 3000 ltr

TRAILER PACKAGES

- 1200, 2000 ltr

→ 1300 062 064
→ Polymaster.com.au/engineered-solutions

Follow us Polymaster Group

Together we hold the future.

Polymaster